Parts List			
Item	Qty	Part Number	Material
1	2	2026-04-08-16-35-53-242	Stahl
2	1	2026-04-24-01-43-44-232	ABS Plastic
3	1	2026-04-24-01-43-44-240	ABS Plastic
4	1	2026-04-24-01-43-44-244	ABS Plastic
5	1	2026-04-24-01-43-44-247	ABS Plastic
6	1	2026-04-24-01-43-44-251	ABS Plastic
7	1	2026-04-24-01-43-44-254	ABS Plastic
8	1	2026-04-24-01-43-44-258	ABS Plastic
9	1	2026-04-24-01-43-44-261	ABS Plastic
10	1	2026-04-24-01-43-44-265	ABS Plastic
11	1	2026-04-24-01-43-44-269	ABS Plastic
12	1	2026-04-24-01-43-44-273	ABS Plastic
13	1	2026-04-24-01-43-44-276	ABS Plastic
14	1	2026-04-24-01-43-44-280	ABS Plastic
15	1	2026-04-24-01-43-44-284	ABS Plastic
16	1	2026-04-24-01-43-44-289	ABS Plastic
17	1	2026-04-24-01-43-44-293	ABS Plastic
18	1	2026-04-24-01-43-44-298	ABS Plastic
19	1	2026-04-24-01-43-44-302	ABS Plastic
20	1	2026-04-24-01-43-44-306	ABS Plastic
21	1	2026-04-24-01-43-44-311	ABS Plastic
22	1	2026-04-24-01-43-44-315	ABS Plastic
23	1	2026-04-24-01-43-44-320	Steel
24	1	2026-04-24-01-43-44-325	ABS Plastic
25	1	2026-04-23-20-16-36-250	Steel
26	1	2026-04-23-20-22-40-197	Steel

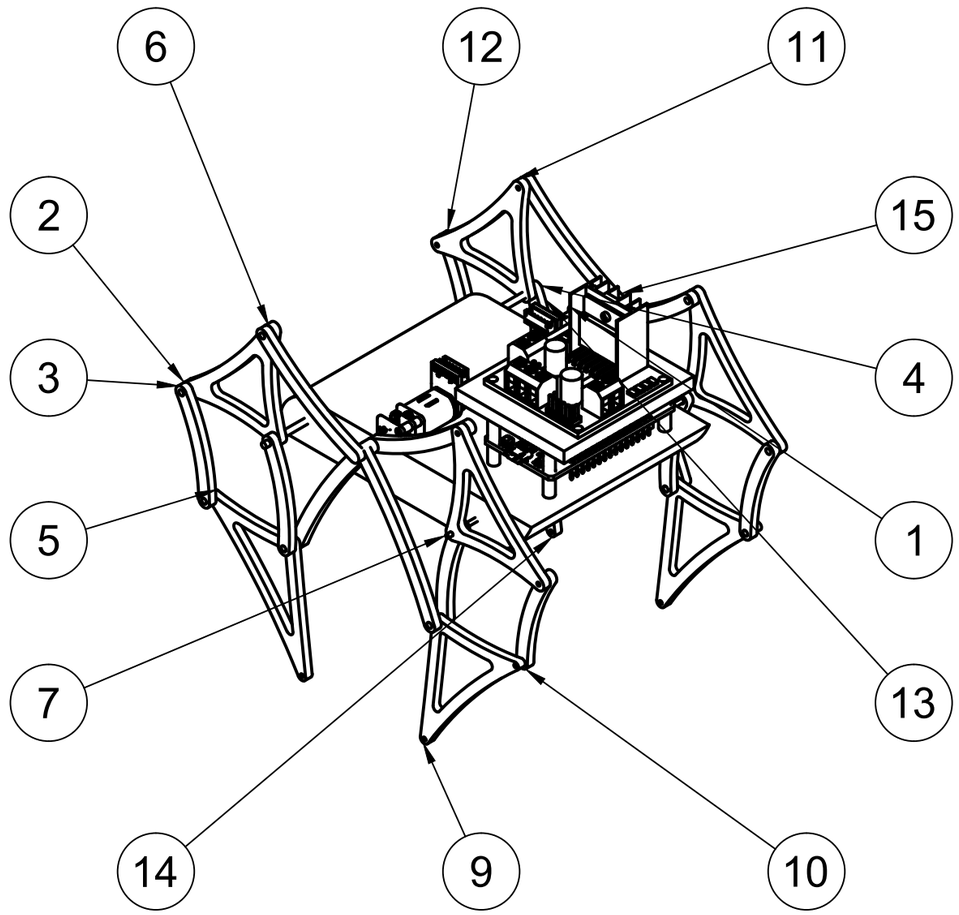

Dept. BAMEE205	Technical reference	Created by Yaswanth Uppalapu 25BST0080	Approved by
		Document type	Document status
		Title ROBOT ASSEMBLY	DWG No.
			Rev. / Date of issue / Sheet 1/25

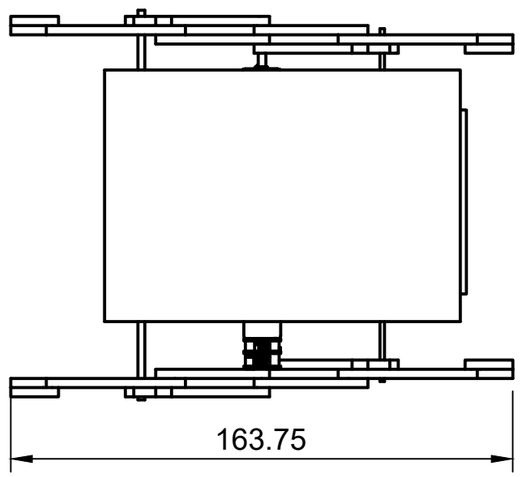

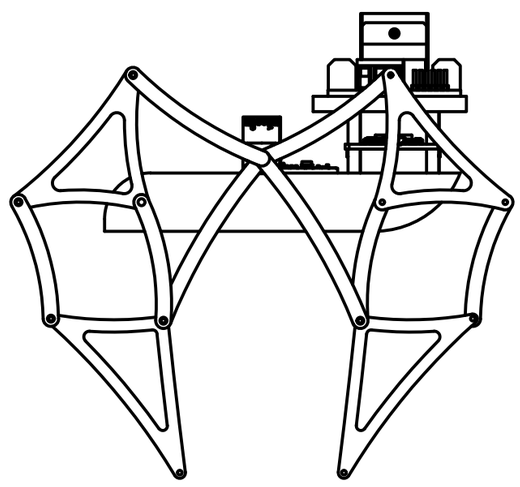

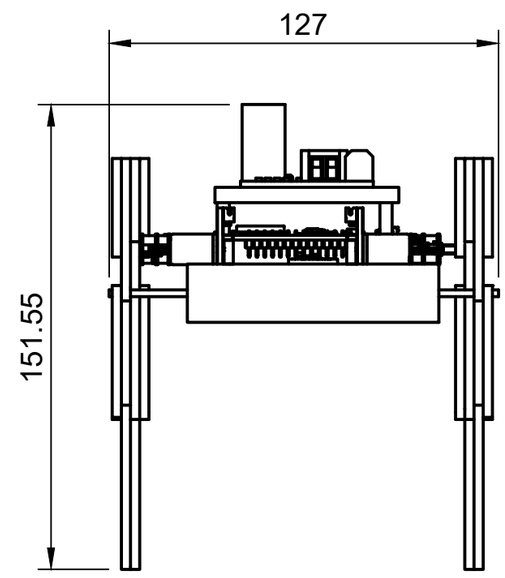

Dept.	Technical reference	Created by Yaswanth Uppalapu 25BST0080	Approved by	
		Document type	Document status	
		Title ROBOT ASSEMBLY	DWG No.	
			Rev. / Date of issue	Sheet 2/25

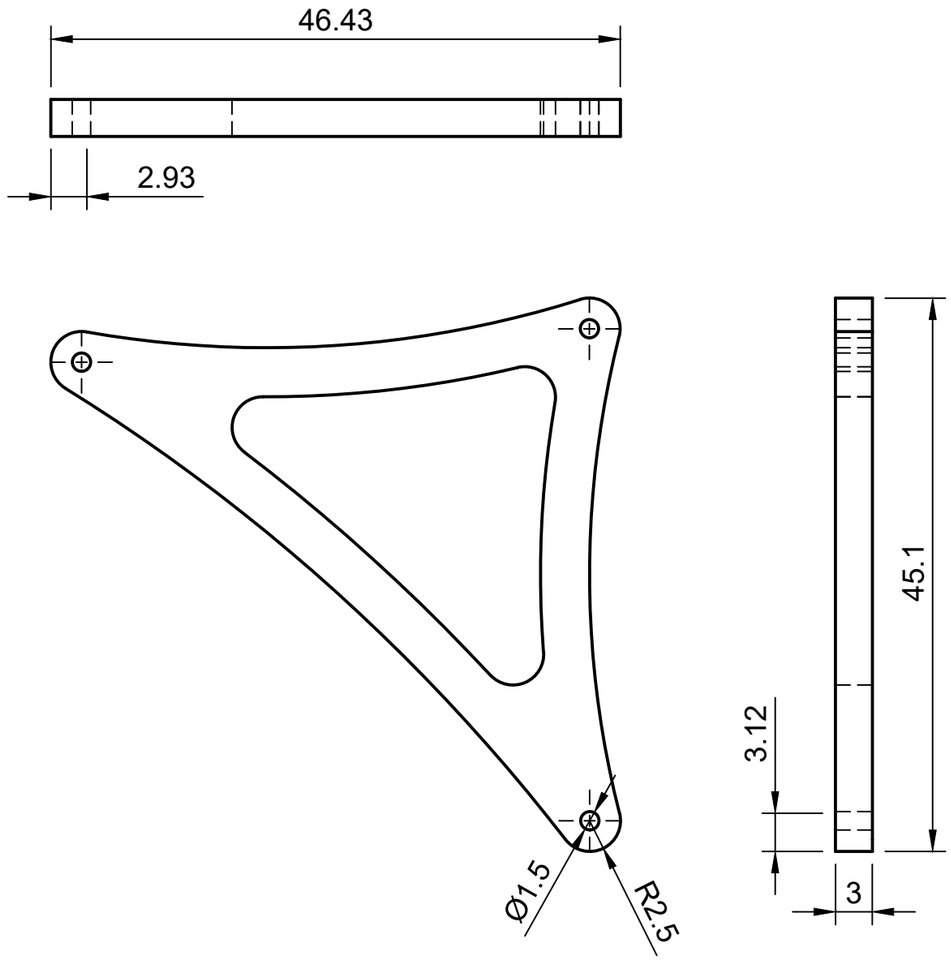

Dept.	Technical reference	Created by Yaswanth Uppalapu 25BST0080	Approved by
		Document type	Document status
		Title ITR1_rb2_linkage_asm	DWG No.
		Rev. / Date of issue	Sheet 3/25

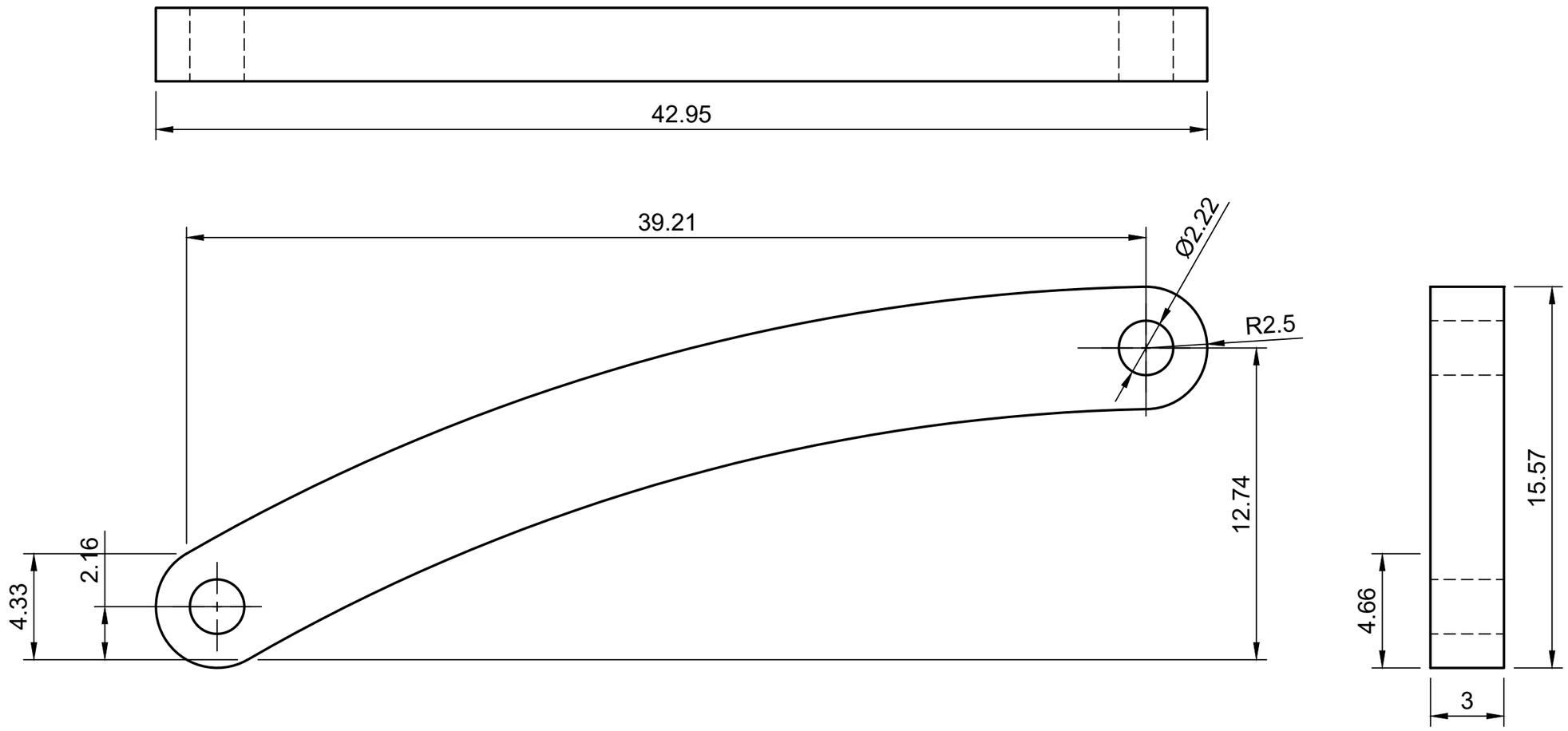

Dept.	Technical reference	Created by Yaswanth Uppalapu 25BST0080	Approved by
		Document type	Document status
		Title ITR1_rb2_linkage_asm	DWG No.
			Rev. / Date of issue / Sheet 4/25

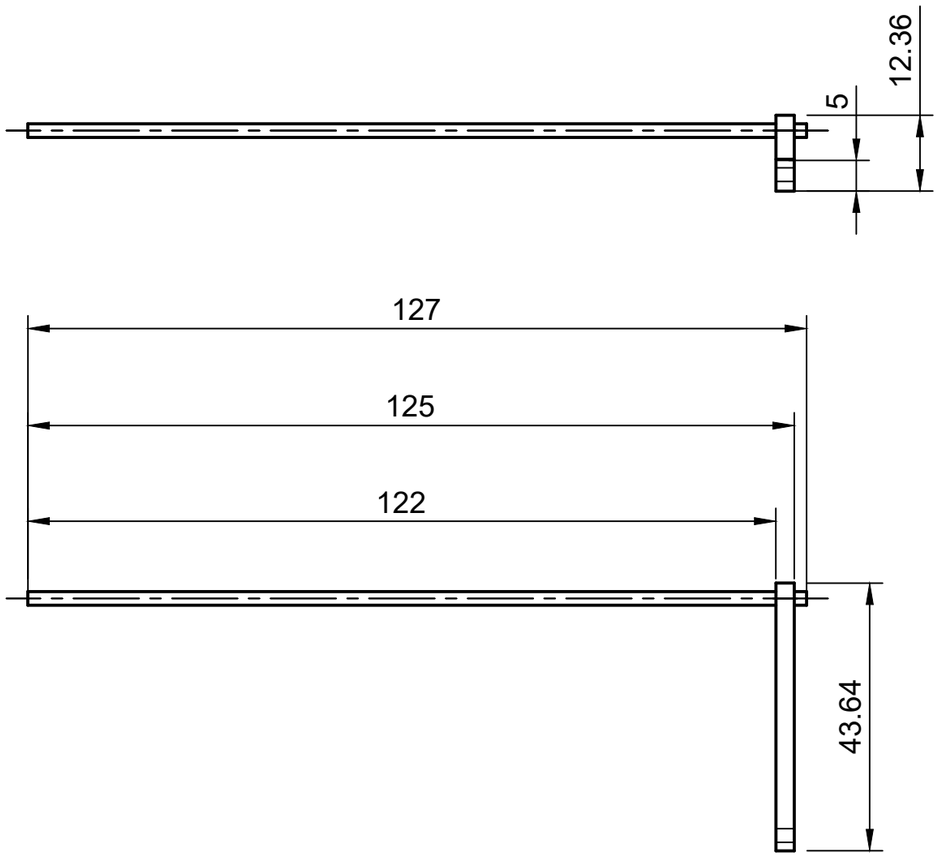

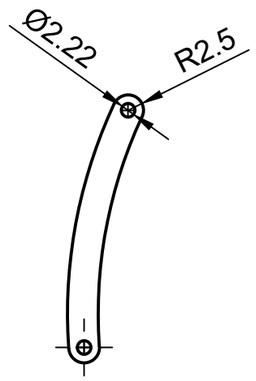

Dept.	Technical reference	Created by	Approved by
		Yaswanth Uppalapu 25BST0080	
		Document type	Document status
		Title ITR1_rb2_linkage_asm	DWG No.
			Rev. / Date of issue / Sheet 5/25

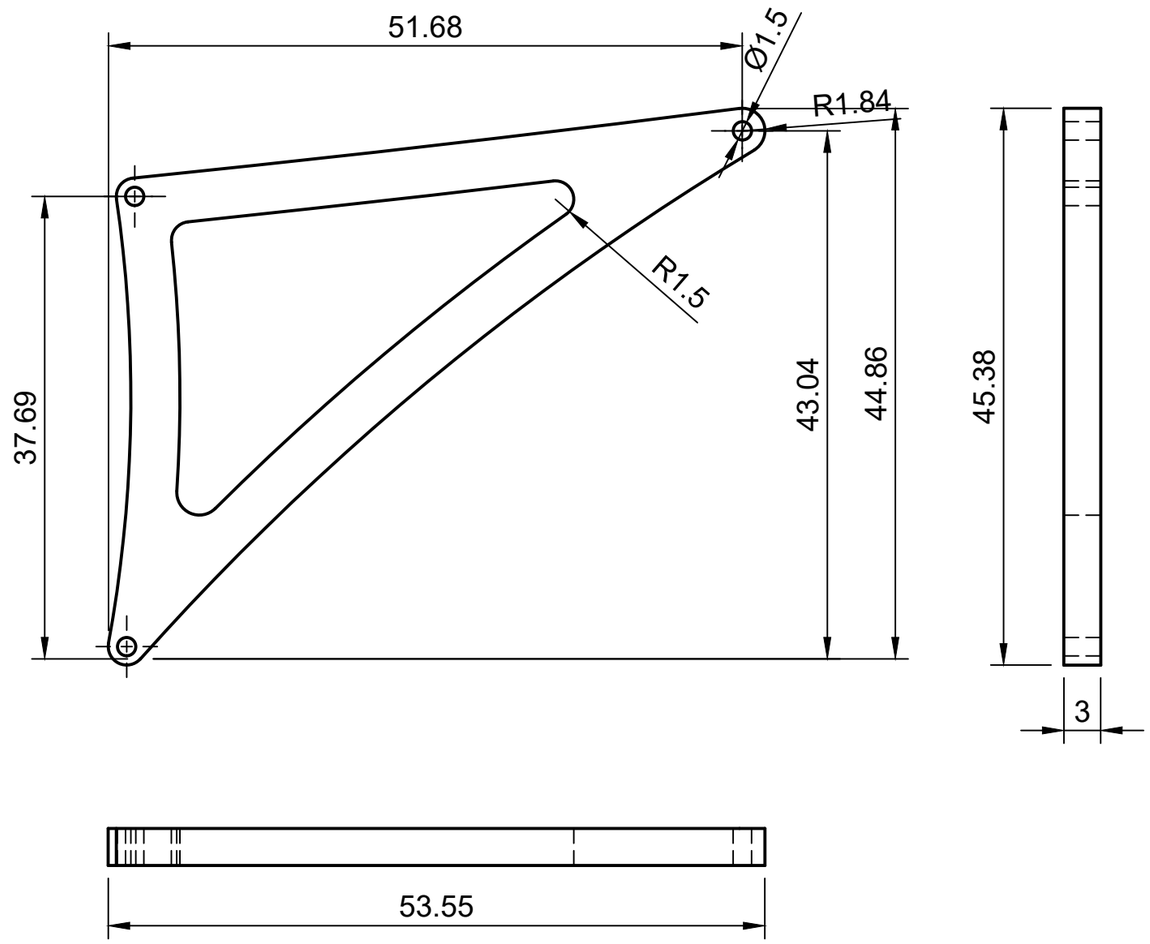

Dept.	Technical reference	Created by Yaswanth Uppalapu 25BST0080	Approved by
		Document type	Document status
		Title ITR1_rb2_linkage_asm	DWG No.
			Rev. / Date of issue / Sheet 6/25

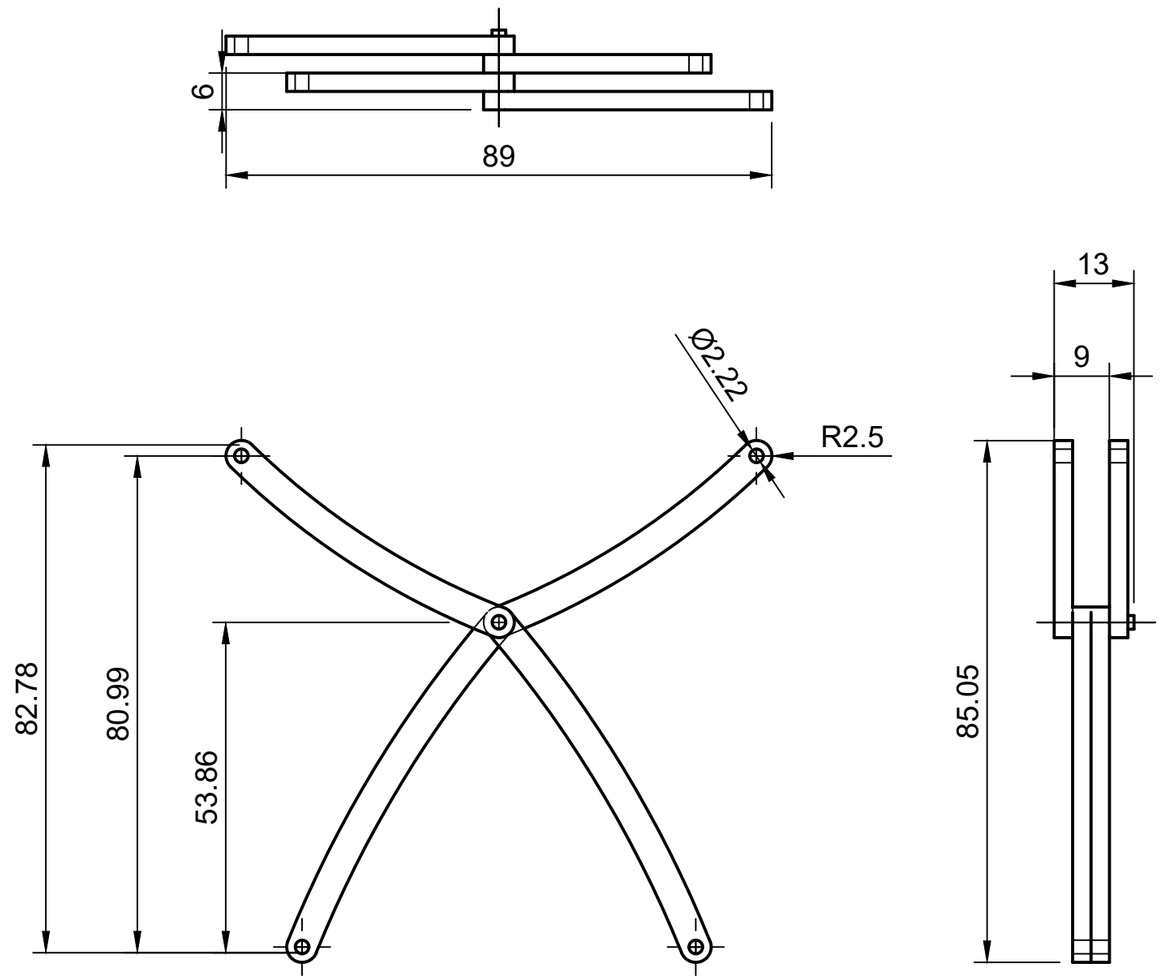

Dept.	Technical reference	Created by Yaswanth Uppalapu 25BST0080	Approved by
		Document type	Document status
		Title ITR1_rb2_linkage_asm	DWG No.
		Rev. / Date of issue	Sheet 7/25

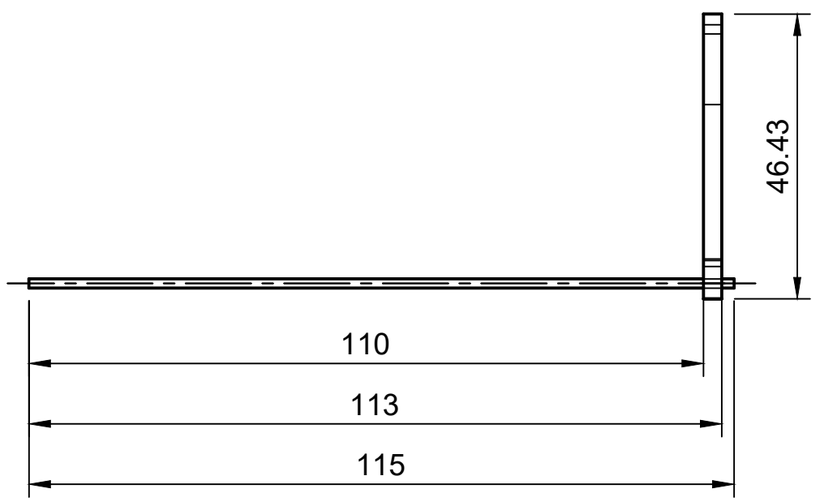

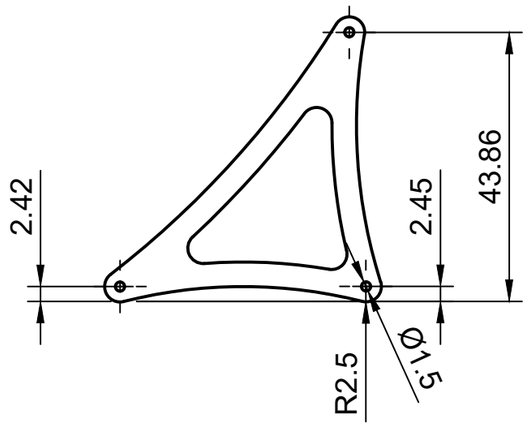

Dept.	Technical reference	Created by	Approved by
		Yaswanth Uppalapu 25BST0080	
		Document type	Document status
		Title ITR1_rb2_linkage_asm	DWG No.
			Rev. / Date of issue / Sheet 8/25

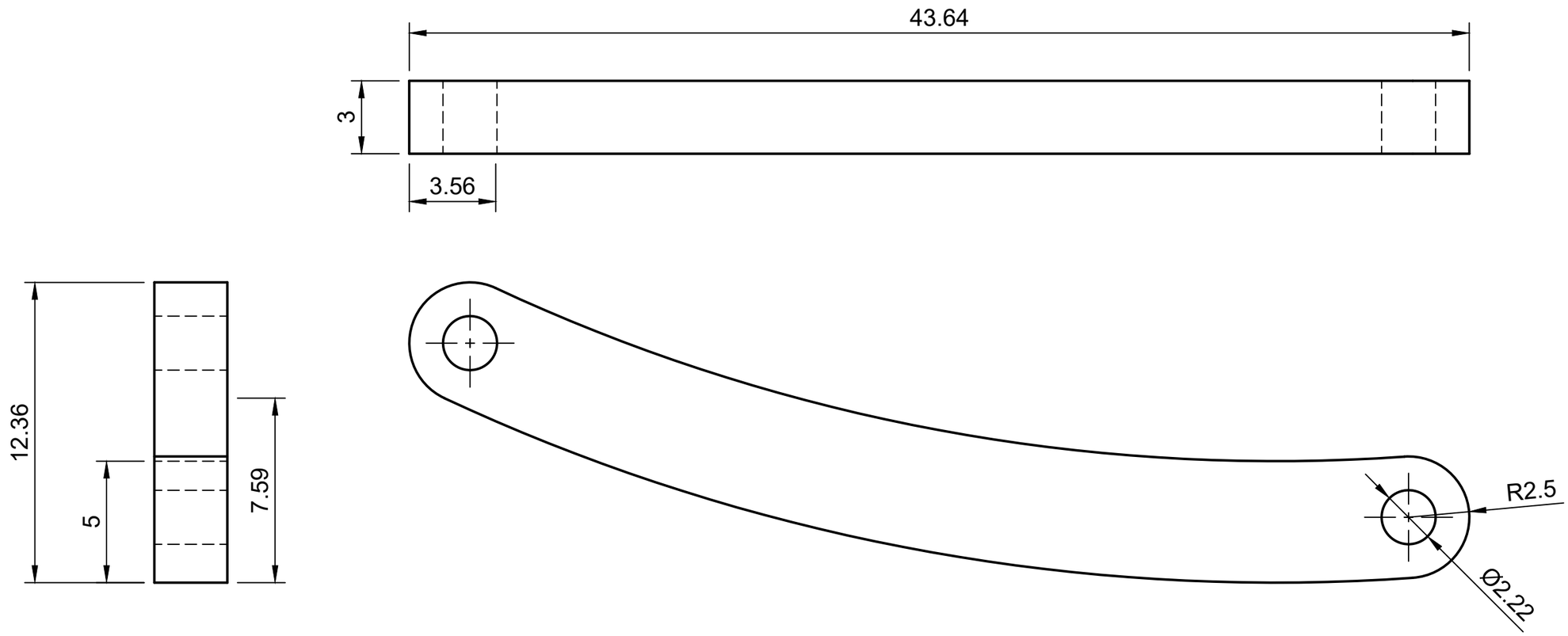

Dept.	Technical reference	Created by Yaswanth Uppalapu 25BST0080	Approved by	
		Document type	Document status	
		Title ITR1_rb2_linkage_asm	DWG No.	
			Rev. / Date of issue	Sheet 9/25

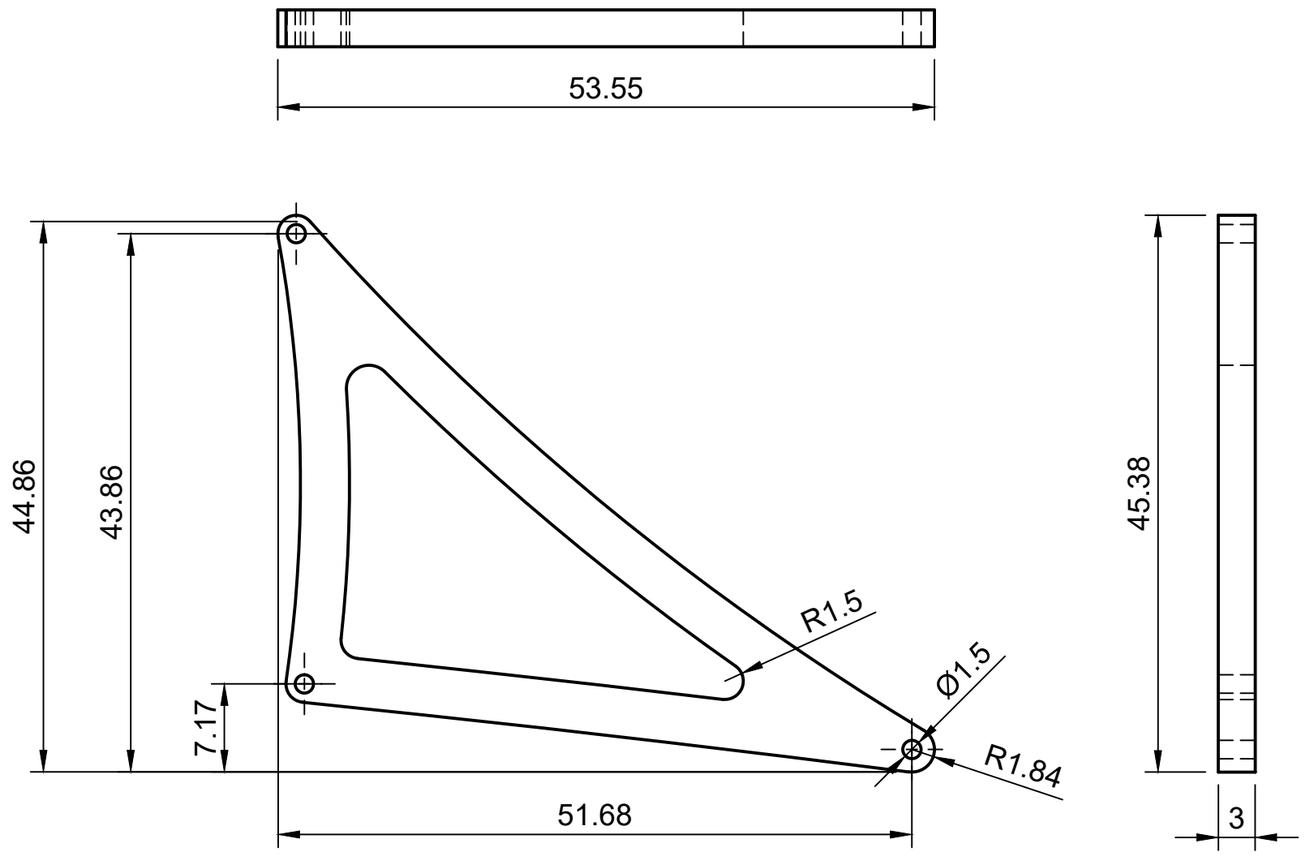

Dept.	Technical reference	Created by Yaswanth Uppalapu 25BST0080	Approved by
		Document type	Document status
		Title ITR1_rb2_linkage_asm	DWG No.
			Rev. / Date of issue / Sheet 10/25

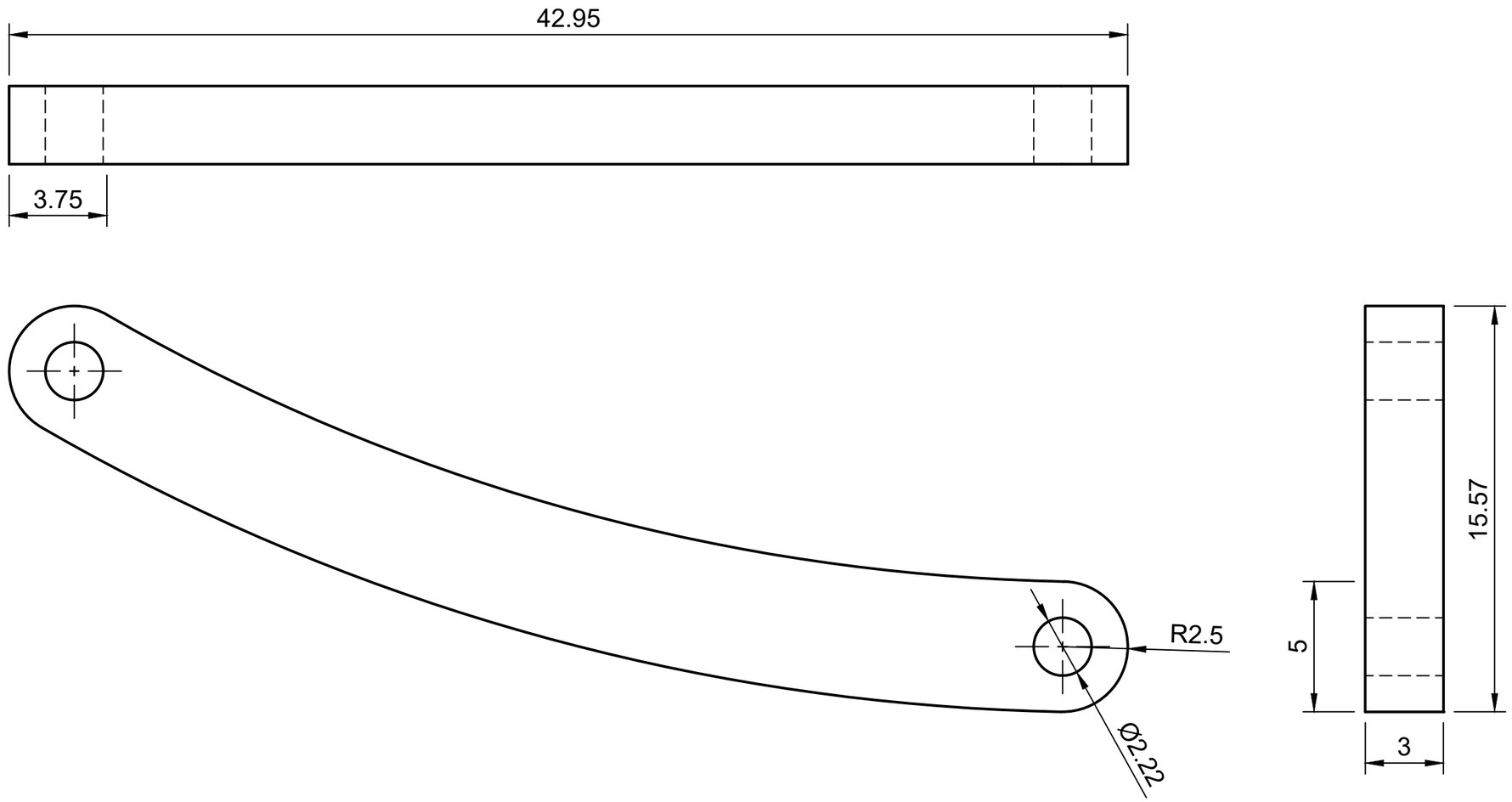

Dept.	Technical reference	Created by Yaswanth Uppalapu 25BST0080	Approved by
		Document type	Document status
		Title ITR1_rb2_linkage_asm	DWG No.
			Rev. / Date of issue / Sheet 11/25

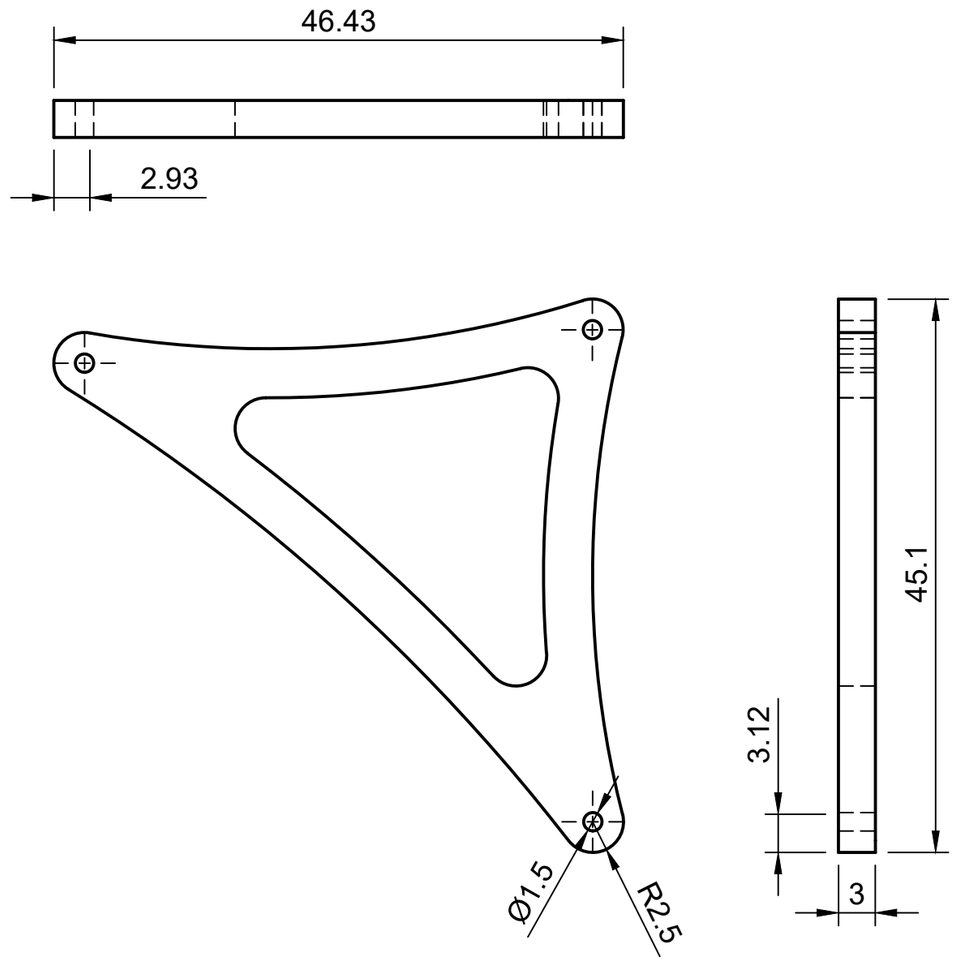

Dept.	Technical reference	Created by Yaswanth Uppalapu 25BST0080	Approved by	
		Document type	Document status	
		Title ITR1_rb2_linkage_asm	DWG No.	
			Rev. / Date of issue	Sheet 12/25

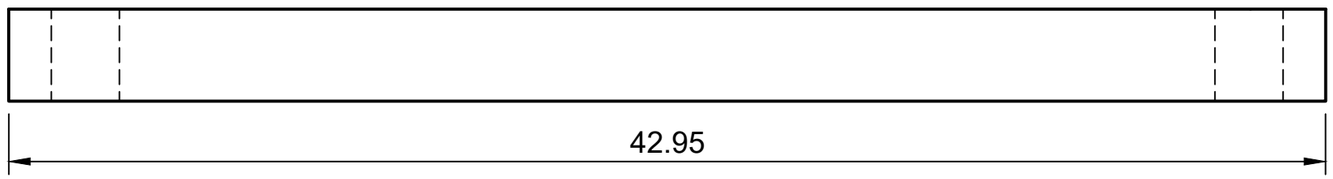

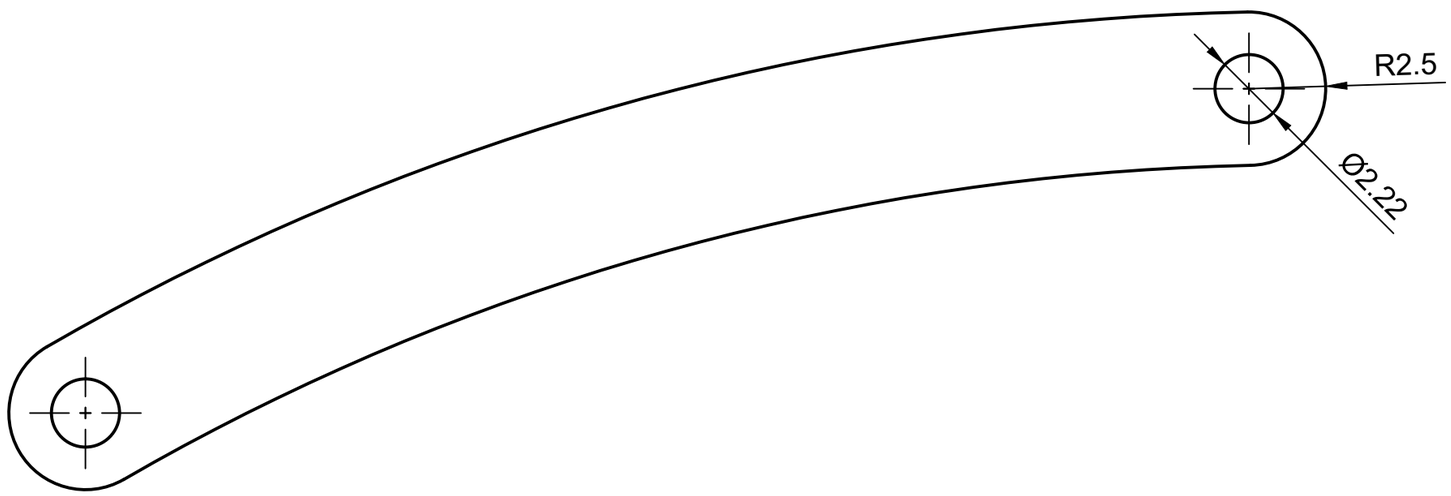

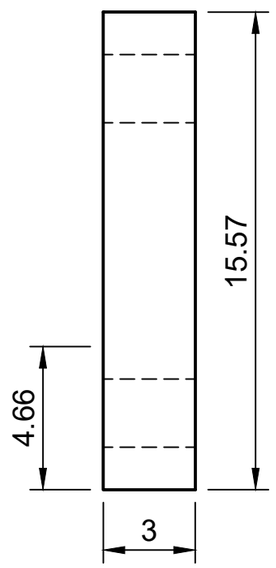

Dept.	Technical reference	Created by Yaswanth Uppalapu 25BST0080	Approved by	
		Document type	Document status	
		Title ITR1_rb2_linkage_asm	DWG No.	
			Rev. / Date of issue	Sheet 13/25

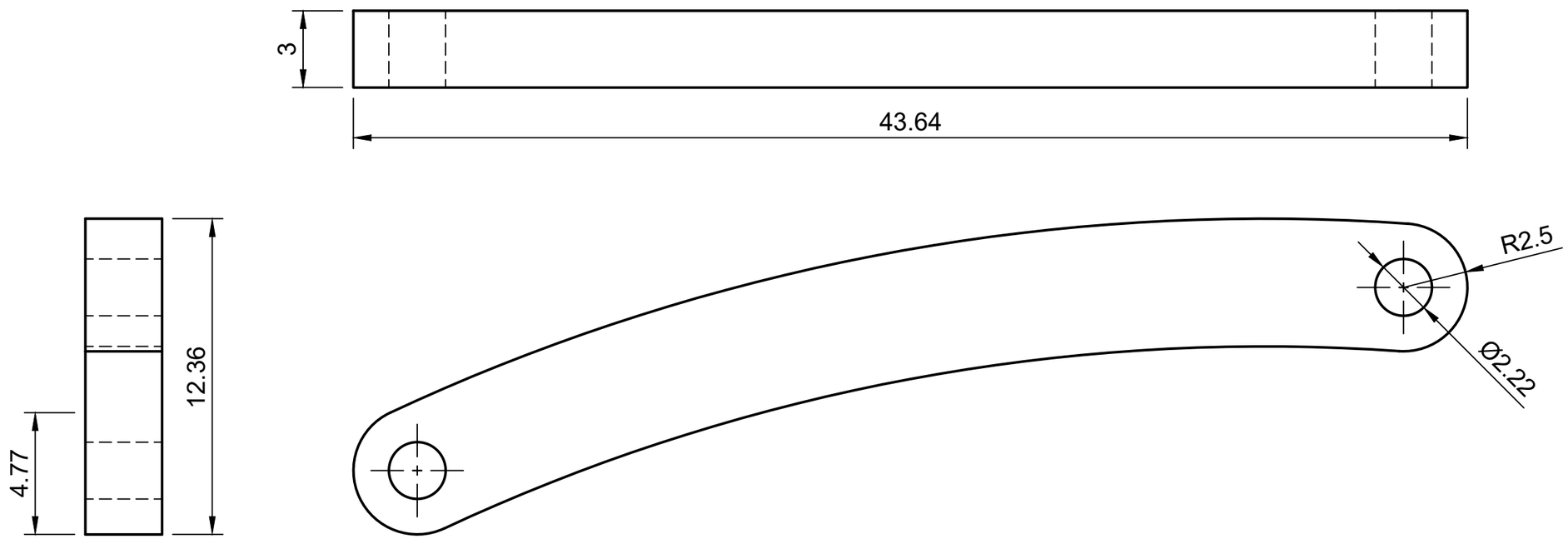

Dept.	Technical reference	Created by	Approved by
		Yaswanth Uppalapu 25BST0080	
		Document type	Document status
		Title ITR1_rb2_linkage_asm	DWG No.
			Rev. / Date of issue / Sheet 14/25

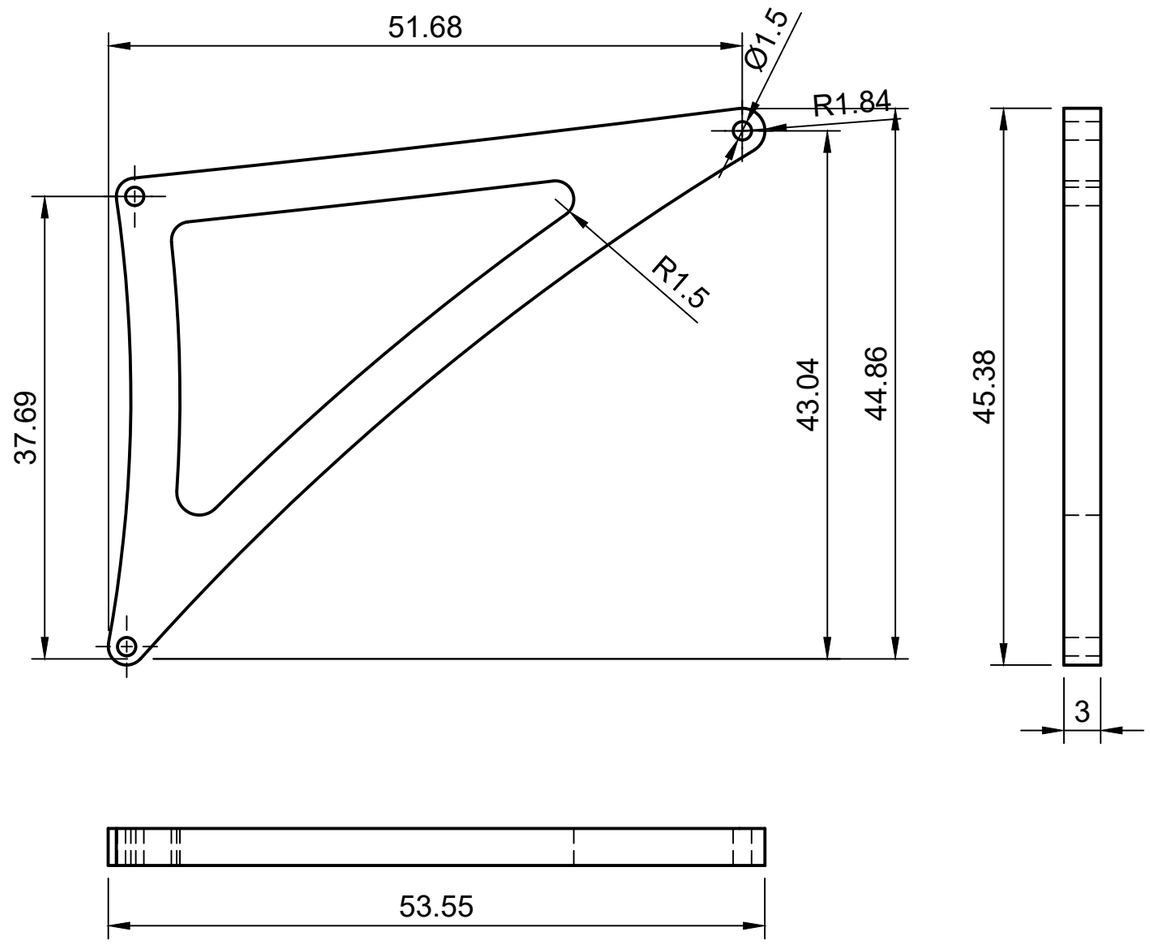

Dept.	Technical reference	Created by Yaswanth Uppalapu 25BST0080	Approved by
		Document type	Document status
		Title ITR1_rb2_linkage_asm	DWG No.
			Rev. / Date of issue / Sheet 15/25

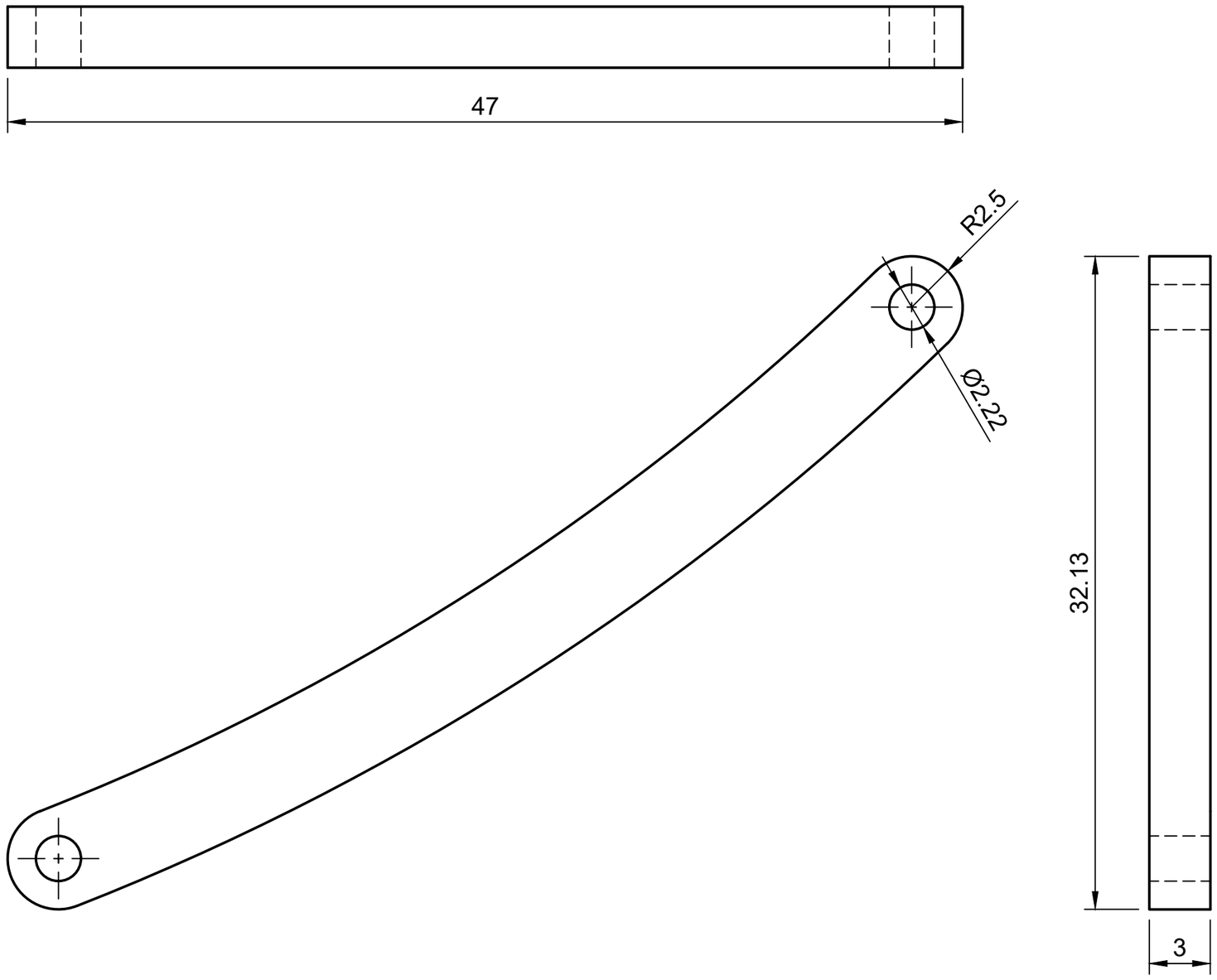

Dept.	Technical reference	Created by	Approved by
		Yaswanth Uppalapu 25BST0080	
		Document type	Document status
		Title	DWG No.
		ITR1_rb2_linkage_asm	
			Rev. / Date of issue / Sheet 16/25

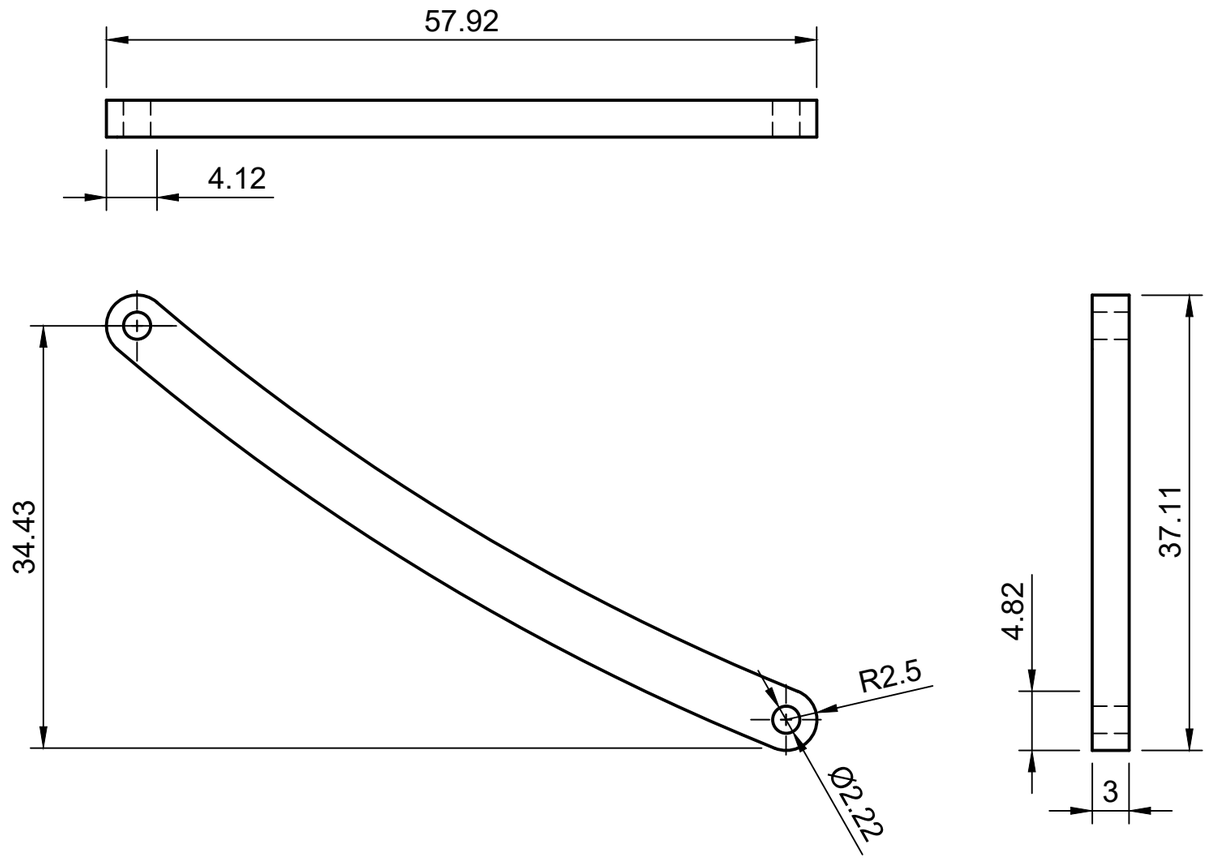

Dept.	Technical reference	Created by	Approved by
		Yaswanth Uppalapu 25BST0080	
		Document type	Document status
		Title	DWG No.
		ITR1_rb2_linkage_asm	
		Rev. / Date of issue	Sheet 17/25

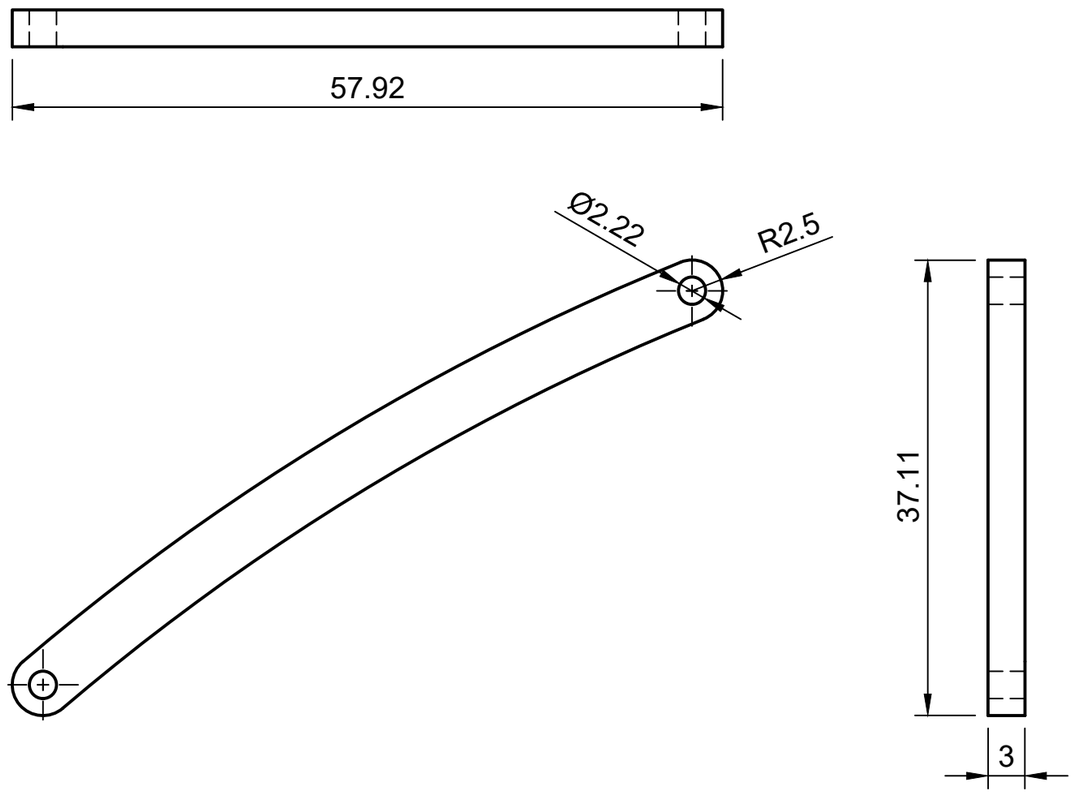

Dept.	Technical reference	Created by Yaswanth Uppalapu 25BST0080	Approved by
		Document type	Document status
		Title ITR1_rb2_linkage_asm	DWG No.
			Rev. / Date of issue / Sheet 18/25

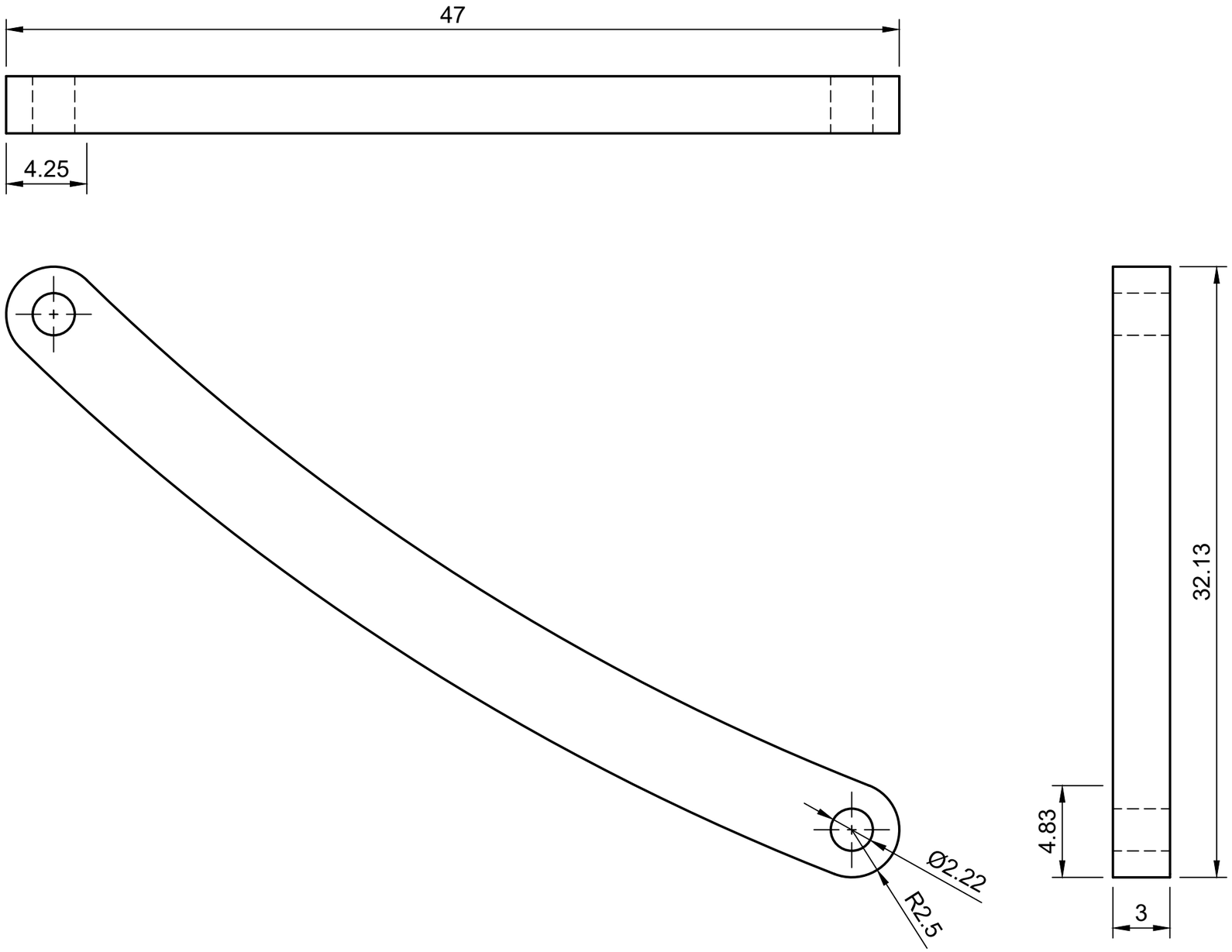

Dept.	Technical reference	Created by Yaswanth Uppalapu 25BST0080	Approved by
		Document type	Document status
		Title ITR1_rb2_linkage_asm	DWG No.
			Rev. / Date of issue / Sheet 19/25

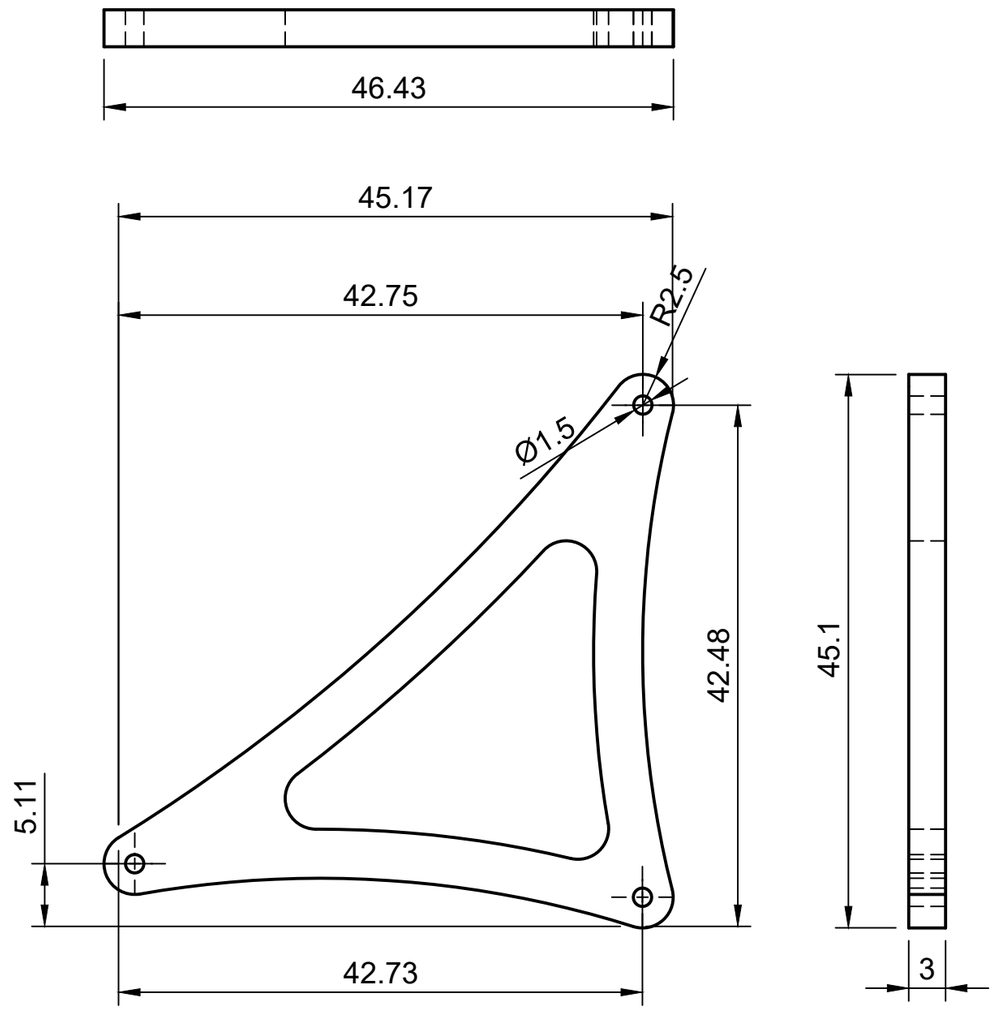

Dept.	Technical reference	Created by Yaswanth Uppalapu 25BST0080	Approved by	
		Document type	Document status	
		Title ITR1_rb2_linkage_asm	DWG No.	
			Rev. / Date of issue	Sheet 20/25

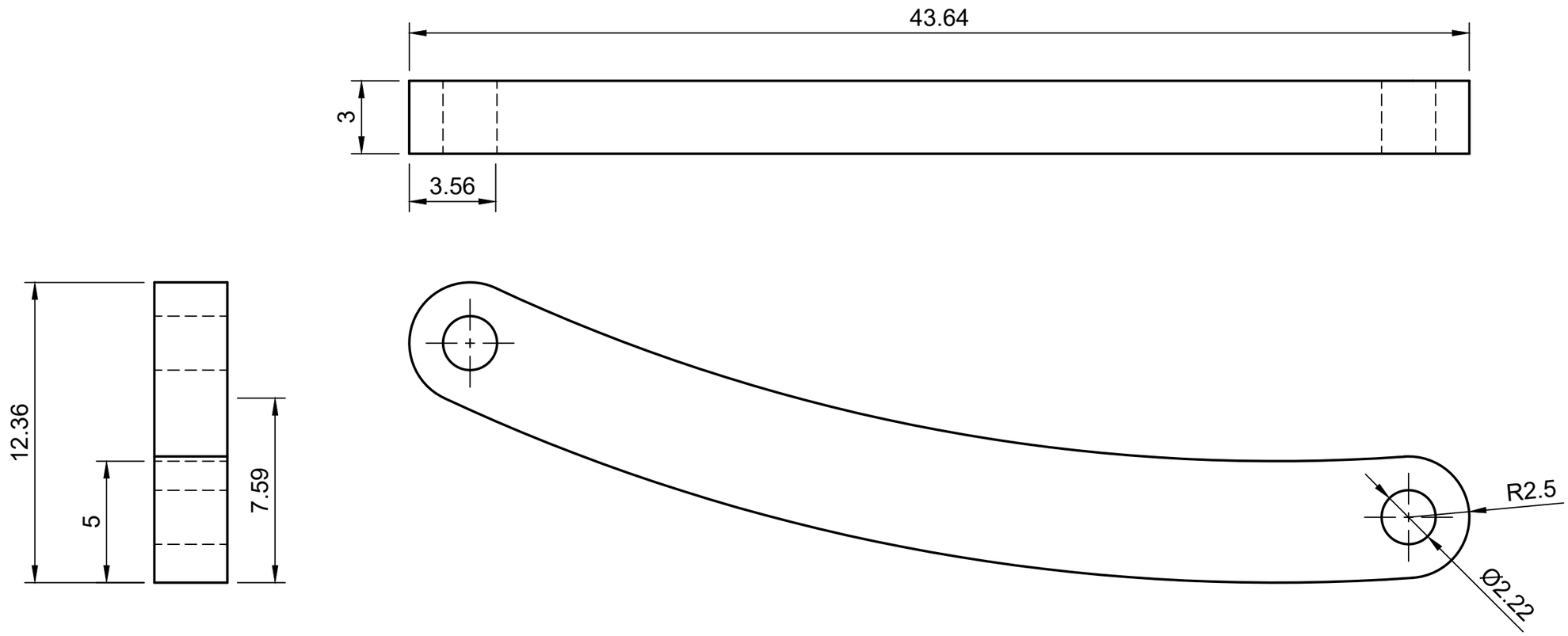

Dept.	Technical reference	Created by Yaswanth Uppalapu 25BST0080	Approved by
		Document type	Document status
		Title ITR1_rb2_linkage_asm	DWG No.
			Rev. / Date of issue / Sheet 21/25

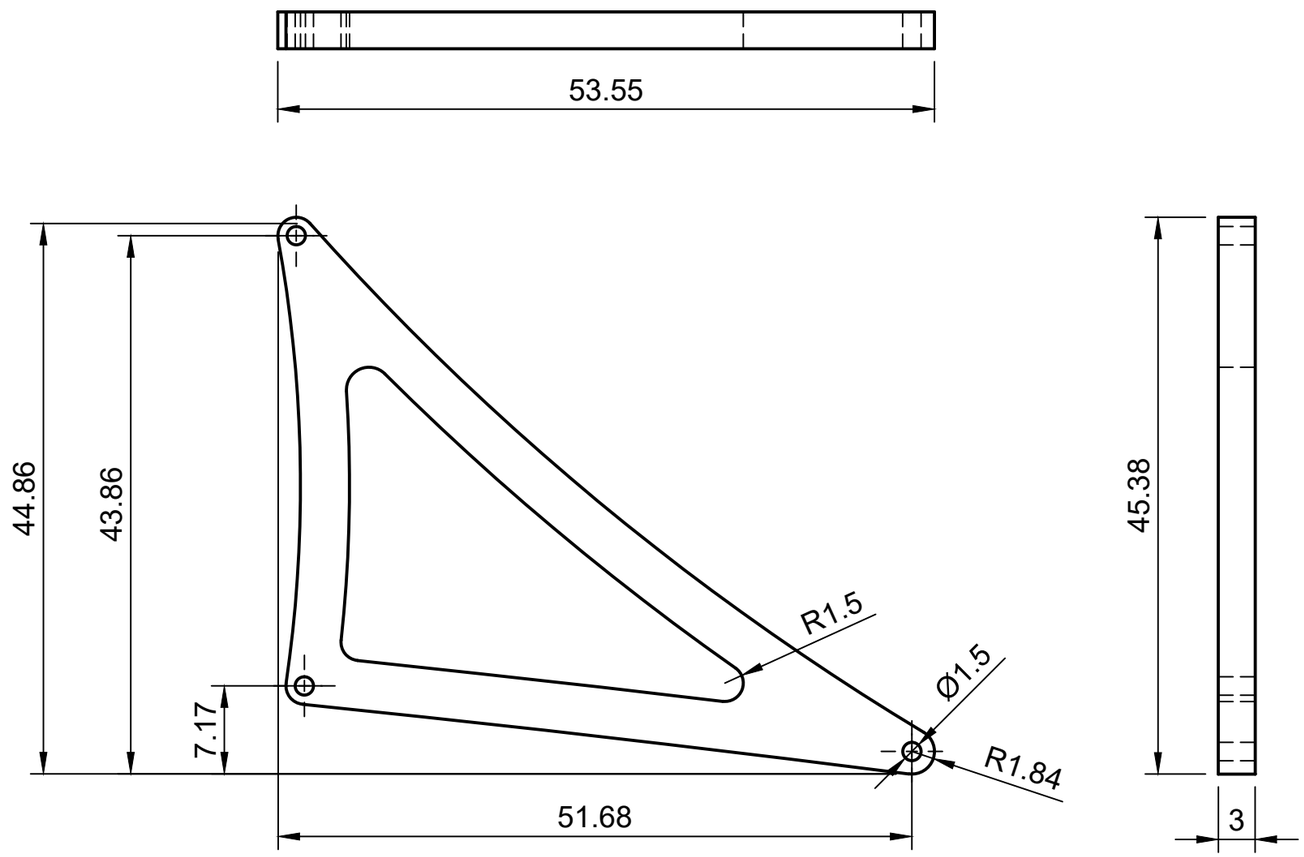

Dept.	Technical reference	Created by Yaswanth Uppalapu 25BST0080	Approved by
		Document type	Document status
		Title ITR1_rb2_linkage_asm	DWG No.
			Rev. / Date of issue / Sheet 22/25

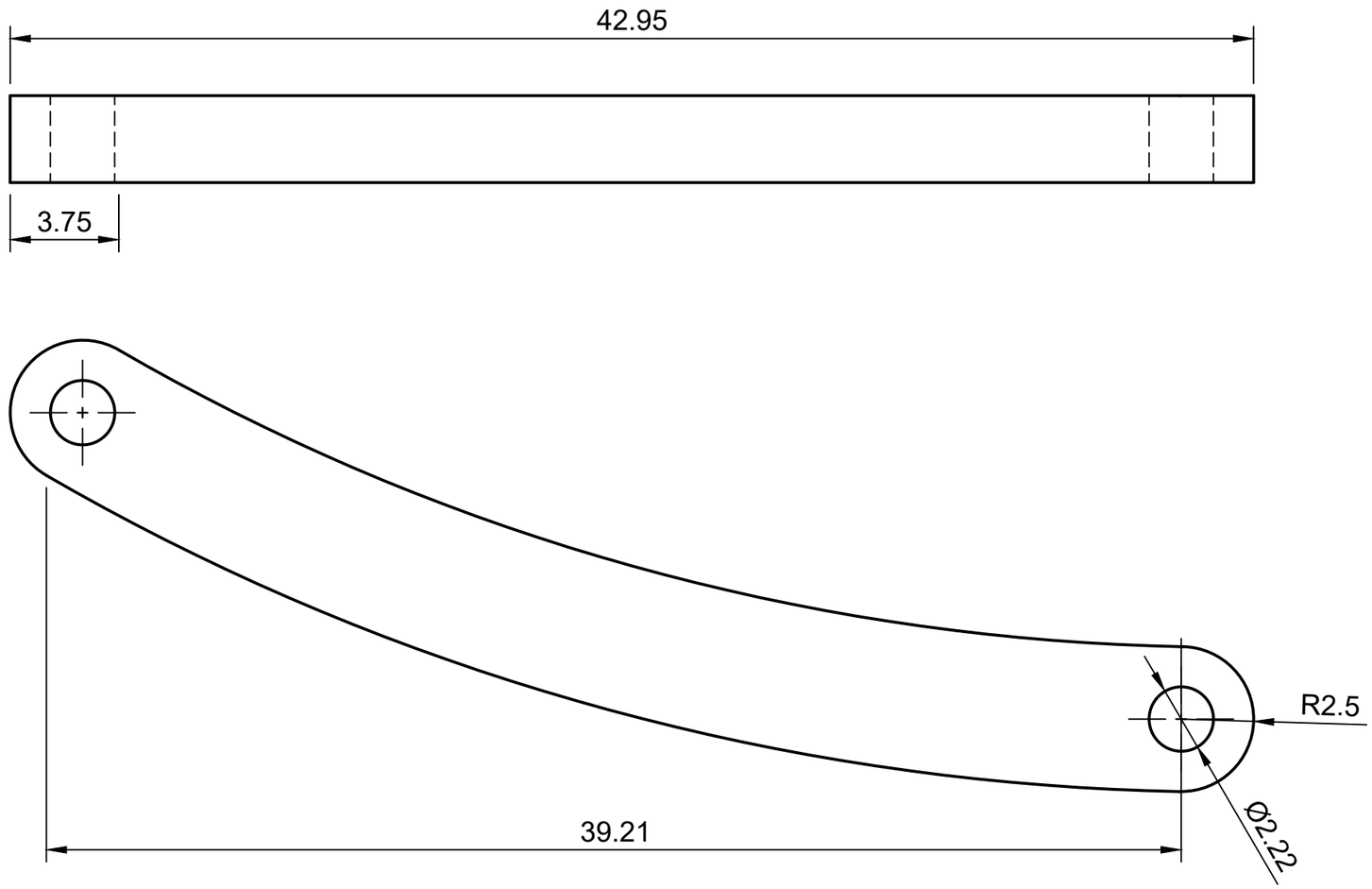

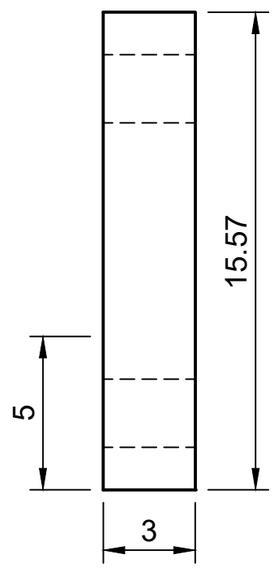

Dept.	Technical reference	Created by Yaswanth Uppalapu 25BST0080	Approved by
		Document type	Document status
		Title ITR1_rb2_linkage_asm	DWG No.
		Rev. / Date of issue	Sheet 23/25

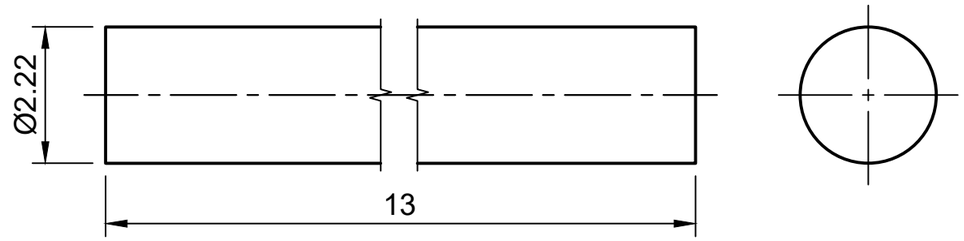

Dept.	Technical reference	Created by Yaswanth Uppalapu 25BST0080	Approved by
		Document type	Document status
		Title ITR1_rb2_linkage_asm	DWG No.
			Rev. / Date of issue / Sheet 24/25

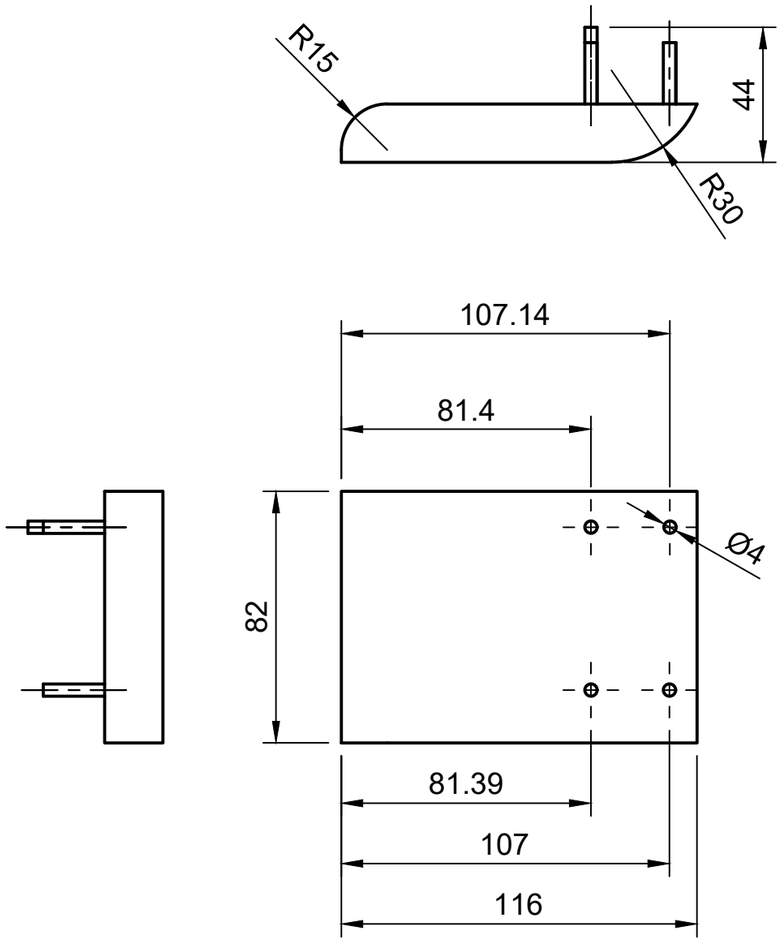

Dept.	Technical reference	Created by Yaswanth Uppalapu 25BST0080	Approved by
		Document type	Document status
		Title ITR1_rb2_linkage_asm	DWG No.
			Rev. / Date of issue / Sheet 25/25